Diesel Spin-On - 700 Series

FUEL

RACOR®

Specifications:

Height: *760: 11.8" (30.0 cm)*
790: 12.8" (32.5 cm)

Width: *4.36" (11.1 cm)*

Depth: *12V (Brush): 6.25" (15.9 cm)*
24V (Brushless): 6.94" (17.6 cm)

Ports: *7/8-14 UNF (SAE J1926)*

Max Flow Rate: *760: 60 gph (227 lph)*
790: 90 gph (341 lph)

Service Clearance: 1.25" (3.2 cm) Below

NOTE: Assemblies Include Push Button Control and Wiring Harness

Create a Part Number

Mounting Head	Flow Rating		Micron Rating	Optional Voltage
Electric Pump - 4 Port	60 gph (227 lph)	90 gph (341 lph)	30 Micron	24 volt
7	60R	90R	30	24

ASSEMBLIES	DESCRIPTION
760R30	FF/WS, 60 gph Flow Rate, 30 Micron Filtration, 12 volt Pump
790R30	FF/WS, 90 gph Flow Rate, 30 Micron Filtration, 12 volt Pump
790R3024	FF/WS, 90 gph Flow Rate, 30 Micron Filtration, 24 volt Pump

Dimensions:

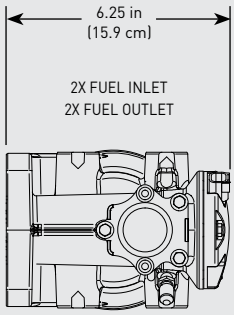

700 Series
12 Volt Top

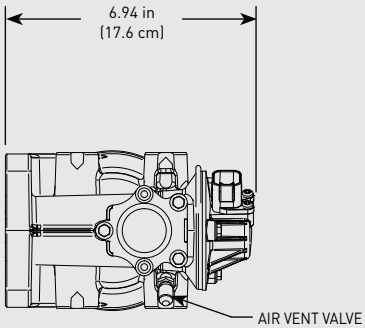

700 Series
24 Volt Top

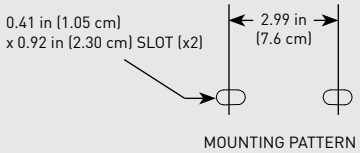

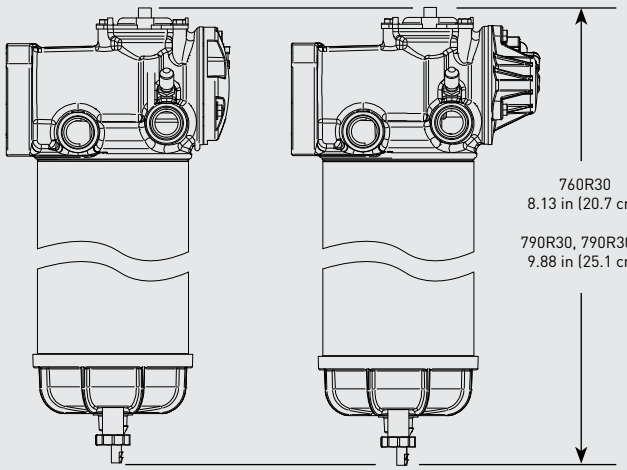

700 Series
12 Volt Profile

700 Series
24 Volt Profile

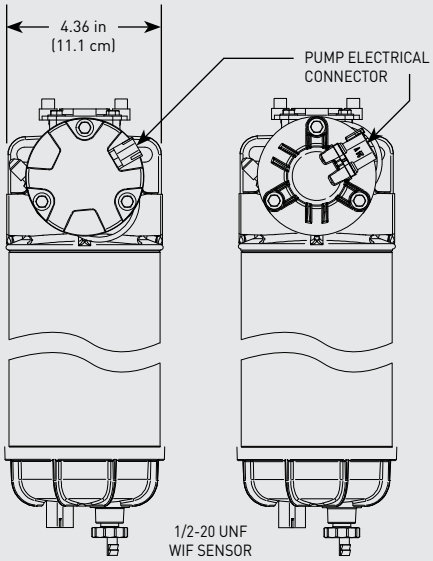

700 Series
12 Volt Front

700 Series
24 Volt Front

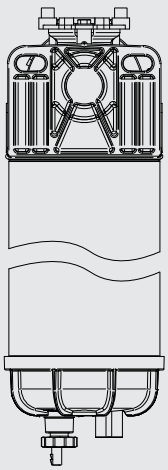

Back

Parker

PARTS

Diesel Spin-On - 700 Series

1

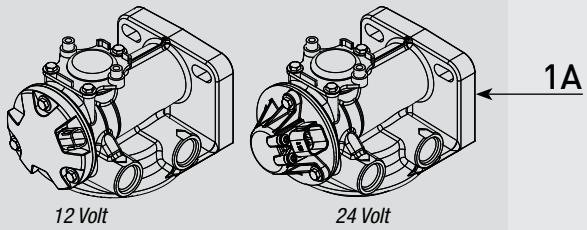

	Part #	Description
1A		Mounting Head - 7/8"-14 UNF Ports

2

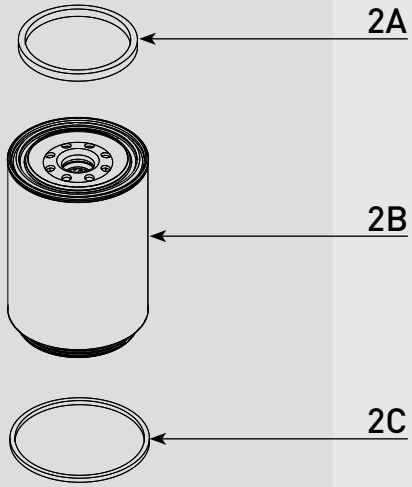

2A		Filter Gasket - *Included in 2B*
2B	**R60P** **R90P**	760 Replacement Filter - 30 micron - *Includes 2A, & 2C* 790 Replacement Filter - 30 micron - *Includes 2A, & 2C*
	**	NOTE: *See 400 Series (RSL0366) or 600 Series (RSL0367) Cutsheets For Additional Available Replacement Filters*
2C		Bowl Gasket - *Included in 2B & 3A*

3

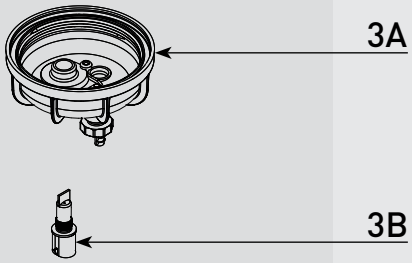

3A	**RK21113-02**	Clear Bowl & WIF Sensor Kit (445/460/490/4125) - *Includes 2C, 3B, & 5A*
3B	**RK33802**	Replacement WIF Probe (1/2"-20 SAE) - No Internal Resistor, 12/24V - *Requires Water Detection Amplifier - See **RSL7529** for available Probes, Sensors, and Amplifiers*

4

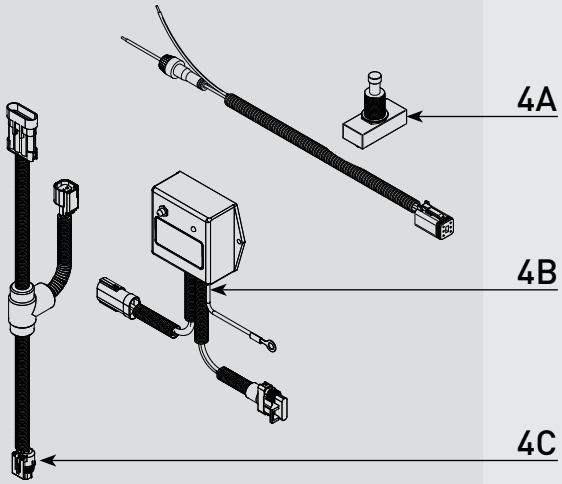

4A		Push Button and Connector Kit (24v) - Push Button Switch & 24 Volt Pump Connector Harness
4B		Control Panel Kit (12v) - Push Button Switch & Light Box
4C		Wire Harness Kit (12v)

Additional Parts (not shown)

5A		Self-Venting Drain
5B	**RK21113-12-10** **RK21113-24-10**	Heated Bowl Kit (445/460/490/4125) - Clear bowl with 12 vdc heater - *Includes 2C, 3B, 5A - Initial installations require heater relay RK 11861 - See 4D* Heated Bowl Kit (445/460/490/4125) - Clear bowl with 24 vdc heater - *Includes 2C, 3B, 5A - Initial installations require heater relay RK 11862 - See 4D*
5C	**RK 20726**	Water Detection Module Kit - 12 or 24 vdc - ***Includes Amplifier (Light and Buzzer) & RK 21069 (WIF Probe)*** *See **RSL7529** for available Probes, Sensors, and Amplifiers*
5D	**RK 11861** **RK 11862**	Heater Relay Kit - 12 Volt Heater Relay Kit - 24 Volt

Online Link
Diesel Integrated Priming Pump Product Selector

Questions? Email: **racortech@parker.com** Phone: **800-344-3286** News: www.**racornews**.com